DH-SD6E432MB-HNR-A-PV1-ATC

4MP 32× Anti-corrosion WizSense PTZ Camera



Xinghan ACUPICK WizSense

- 1/2.8" 4Megapixel CMOS.
- 32× optical zoom.
- Max 50/60 fps@4M(2560 × 1440).
- IR distance up to 250 m.
- Xinghan Large-Scale AI Models.
- Warm light distance up to 100 m.
- Built-in dual Mic and a speaker for two-way talk.
- Sound and light alarm (red and blue lights).
- WizTracking
- Perimeter protection.
- Face detection.
- AcuPick.
- Gyroscope EIS.
- IP67, IK10 (excluding glass window), NEMA 4X,C5-H.
- TPM2.0.



Launched by Dahua Technology, WizSense is a series of AI products and solutions that adopt independent AI chip and deep learning algorithm. It focuses on human and vehicle with high accuracy, enabling users to fast act on defined targets. Based on Dahua's advanced technologies, WizSense provides intelligent, simple and inclusive products and solutions.

Series Overview

The Three-in-One Camera (TiOC) solution combines 24/7 monitoring, active deterrence and real-time alarms with artificial intelligence into one smart, innovative solution. TiOC PTZ cameras adopt auto-tracking 3.0 technology, greatly improving the monitoring scope of key targets. For distributors and installers, it not only saves time, but also reduces cost.

Functions

Smart Dual Light

Dahua Smart Dual Light technology adopts smart algorithm to detect targets. Usually, the IR illuminator is on at night; when the target appears in the monitoring area, the white light is on, and the camera records the full-color video and information of key events. That is, the camera links snapshot and video with full-color image. When the target is out of the monitoring area, the white light is off and the IR illuminator is on, which reduces light pollution efficiently.

Face Detection

Dahua Face Detection technology can detect the face in the image. With deep learning algorithm, the technology supports detecting, tracking, capturing and selecting the best face image, and then outputs face snapshot.

IVS

With advanced video algorithm, Dahua IVS technology supports intelligent functions, such as tripwire and intrusion.

SMD4.0

Dahua Smart Motion Detection technology works with intelligent algorithms to classify targets that trigger motion detection alarms. It filters out objects that are not targets, such as small and large animals, to avoid triggering false alarms.

Xinghan Large-Scale AI Models-Vision

Xinghan Large-Scale AI Models-Vision seamlessly expands the storage and operational capacity of algorithmic models through the powerful integration of edge AI model algorithms and NPU computing power. Engineered with a lightweight transformer architecture and enhanced by model distillation and quantization techniques, it optimizes the computing power consumption of ViT operators. This enables the system to collaborate on multiple tasks simultaneously through joint inference between small and large models optimized for edge devices.

AcuPick

This industry-leading search technology effectively utilizes both front-end and back-end intelligence to help with searching through massive video data to quickly and conveniently locate targets with greater precision.

Enhanced Anti-Corrosion Aluminum Alloy

The camera is engineered with an innovative alloy structure from which impurities have been removed. Its electrochemical corrosion resistance is significantly higher than that of conventional aluminum alloys. And its dual-reinforced surface forms a dense protective barrier. Certified to C5-H and NEMA 4X standards, it is ideal for high-humidity and high-salinity environments such as ports, islands, cross sea bridges, coastal buildings, or areas prone to sulfidation, nitridation, or acid rain.

Technical Specification

Camera

Image Sensor	1/2.8" CMOS
Max. Resolution	2688 (H) × 1520 (V)
Scanning System	Progressive
Electronic Shutter Speed	1s–1/30,000s
Min. Illumination	0.005 lux@F1.6 (Color, 30 IRE) 0.0005 lux@F1.6 (B/W, 30 IRE) 0 lux (illuminator on)
S/N Ratio	>56 dB
Illumination Distance	Up to 100 m (328.08 ft) (Warm light) Up to 250 m (820.21 ft) (IR)
Illuminator On/Off Control	Auto;Manual;Zoomprio
Illuminator Number	6 (Multi-core (IR + warm) light)

Lens

Optical Zoom	32×
Hybrid Zoom	32×
Lens Mount	Module
Focal Length	4.8 mm–154 mm
Max. Aperture	F1.6–F4.0
Field of View	H: 55.8°–2.3°; V: 31.9°–1.3°; D: 63.7°–2.7°
Iris Control	Auto;Manual
Iris Control Type	DC-Iris
Close Focus Distance	0.1 m–1.5 m (0.33 ft–4.92 ft)

	Lens	Detect	Observe	Recognize	Identify
DORI Distance	W	96.0 m (314.96 ft)	37.9 m (124.34 ft)	19.2 m (62.99 ft)	9.6 m (31.50 ft)
	T	3080.0 m (10104.99 ft)	1216.6 m (3991.47 ft)	616.0 m (2021.00 ft)	308.0 m (1010.50 ft)
	*DORI (Detect, Observe, Recognize, Identify) is a standard system (EN-62676-4) for defining the ability of a person viewing the video to distinguish persons or objects within a covered area. The numbers in this table do not reflect intelligent function distances. For intelligent function distances, refer to installation and commissioning manual/project design tool.				

Intelligence

Intelligence Notes	Only video metadata, perimeter protection and face detection cannot be enabled at a time.
IVS (Perimeter Protection)	Tripwire; intrusion; crossing fence detection; loitering detection; abandoned/missing object; fast moving; parking detection; people gathering; human and vehicle alarm classification; linkage tracking. Offers Perimeter Protection Large-Scale AI Models to extend the target detection range and reduce the rate of false alarm. Supports self-learning, it filters out false alarms.
Smart Object Detection	Smart Abandoned Object and Smart Missing Object. By implementing Object Detection Large-Scale AI Models, it allows the camera to identify a wider range of objects.
SMD	SMD 4.0
AcuPick	Uses deep learning algorithms and works with backend devices to accurately match targets, such as people and motor vehicles, and search through live and recorded videos to quickly locate targets
Face Detection	Face detection; snapshot; snapshot optimization; optimal face snapshot upload; face enhancement; face attributes extraction including 6 attributes and 8 expressions; face snapshot set as face or one-inch photo; snapshot strategies (real-time snapshot, quality priority and optimization snapshot)
PPE Detection	Detects 6 helmet colors: Red, orange, yellow, blue, white, and black. An alarm will be triggered when a person is not wearing a helmet or when the color of the helmet that they are wearing does not match the configured color. It also supports compliance detection for work uniforms. Up to 5 work uniform sample libraries can be uploaded, which together can contain up to 1,000 images (the images must be 1080p and in the JPG format). An alarm will be triggered when the similarity between the detected work uniform and the samples in the library is below the set threshold (that is, below the minimum compliance standard for work uniforms). The system supports detecting the attributes of work uniforms such as the color of the uniform, and whether or not the person is wearing a mask and wearing shoe covers. An alarm will be triggered when the target is detected as not meeting the set requirements. It also detects and triggers alarms when only one person is in the construction site, and when no one is present in the detection area such as when a worker leaves their post or an area is left unmanned.
Video Metadata	Supports detection of motor vehicles, non-motor vehicles, faces and human bodies, optimization, capturing pictures, and uploading high-quality face snapshots. It extracts attributes from motor vehicles and non-motors, detecting up to 9 attributes for motor vehicles and 7 for non-motor vehicles. It also extracts attributes from human faces and bodies, detecting up to 6 attributes for faces, and 8 for bodies.

Video

Video Compression	H.265; H.264; H.264B; H.264H; MJPEG (Only supported by sub stream)
Smart Codec	Smart H.265+; Smart H.264+
AI Coding	AI H.265; AI H.264 *includes smart codec technology, Smart H.265+ and Smart H.264+
Video Frame Rate	Main stream: 4M/1080p/1.3M/720p@(1–50/60 fps) Sub stream 1: D1/VGA/CIF@(1–50/60 fps) Sub stream 2: 1080p/1.3M/720p/@(1–50/60 fps)
Streaming Capability	3 streams
Resolution	4M (2688 × 1520/2560 × 1440); 3M (2304 × 1296); 1080p (1920 × 1080); 720p (1280 × 720); D1 (704 × 576/704 × 480); VGA (640 × 480); CIF (352 × 288/352 × 240)
Bit Rate Control	VBR;CBR
Video Bit Rate	H.264: 96 kbps–15104 kbps; H.265: 38 kbps–9216 kbps
Day/Night	Yes (Switchable between colorful channel and B/W channel)
BLC	Yes

HLC	Yes
WDR	120 dB
White Balance	Auto; Indoor; Outdoor; Tracking; Manual; Sodium lamp; Natural; Street lamp
Gain Control	Manual;Auto
Noise Reduction	2D NR; 3D NR
Motion Detection	Yes
Region of Interest (RoI)	Yes
Image Stabilization	Gyroscope EIS
Smart Illumination	Yes
Smart Dual Light	Yes
Defog	Electronic
Digital Zoom	16×
Image Rotation	180°
Privacy Masking	Up to 32 areas can be set, with up to 8 areas in the same view; color block and mosaic selectable.

Audio

Built-in MIC	Yes, built-in dual Mic
Built-in Speaker	Yes, built-in speaker;Max power consumption: 2 W; max sound level at 10 cm: 110 dB * Test results from laboratory
Audio Compression	PCM; G.711a; G.711Mu; G.726; AAC; MPEG2-Layer2; G.722.1; G.729; G.723

Alarm

Alarm Event	Motion/tampering detection; audio detection; network disconnection detection; IP conflict detection; memory card state detection; memory space detection

Network

Network Port	1 (baud rate range: 1200 bps–115200 bps)
Network Protocol	HTTP; HTTPS; TCP/IP; IPv4; RTSP; UDP; SMTP; NTP; DHCP; DNS; DDNS; IPv6; 802.1x; SSL; QoS; FTP; UPnP; ICMP; SNMP; IGMP; ARP; RTCP; RTP; PPPoE; RTMP; Bonjour; SMB; NFS
Interoperability	ONVIF (Profile S & Profile G & Profile T & Profile M); CGI; SDK
User/Host	20 (total bandwidth: 64 M)
Storage	Micro SD card (support max. 1 TB); FTP; SFTP; NAS
Browser	IE 9 and later versions Chrome 41 and later versions Firefox 50 and later versions Safari 10 and later versions
Management Software	DMSS; DSS Pro
Mobile Client	iOS;Android
Security	Video encryption;Firmware encryption;Configuration encryption;Digest;WSSE;Account lockout;Security logs;IP/MAC filtering;Generation and importing of X.509 certification;syslog;HTTPS;802.1x;Trusted boot;Trusted execution;Trusted upgrade;Session security;Security warning;SSL/TLS1.2;AES 256;TPM 2.0 (FIPS 140-2 level 2)

Function

Light Warning	Red and blue warning light Flash duration: 5 s–30 s Flash frequency: high, medium, low
Sound Warning	Offers 11 sound alarms and supports importing 10 custom sound alarms. Sound: 0–100. Play times can be set from 1 to 10.
Heater (Window Heating)	Yes

PTZ

Pan/Tilt Range	Pan: 0° to 360° endless Tilt: –20° to +90°, auto flip 180°
Manual Control Speed	Pan: 0°/s–260°/s; Tilt: 0°/s–140°/s
Preset	300
Preset Speed	Pan: 300°/s; Tilt: 200°/s
Tour	8 (up to 32 presets per tour)
Pattern	5
Scan	5
Power-off Memory	Yes
Idle Motion	Preset;Pattern;Tour;Scan
PTZ Protocol	DH-SD Pelco-P/D (Auto recognition)

Certification

Certifications	CE: EN55035EN IEC61000-3-2; EN55032; EN60950; EN62368-1; NEMA 4X; C5-H(ISO12944-6:2018).

Port

RS-485	1 (baud rate range: 1200 bps–115200 bps)
Audio Input	1 channel (Bare wire)
Audio Output	1 channel (Bare wire)
Alarm Input	7 channels in: supports wet contact connection (max load 5 mA 3–5 VDC); supports dry contact connection
Alarm Output	2 channels out: dry contact, max load 1,000 mA 30 VDC/500 mA 50 VAC

Power

Power Supply	24 VDC, 2.5 A (±25%); PoE+ (802.3at)
Power Consumption	Basic: 16 W (24 VDC) Max (WDR + IR on + PTZ operation + Alarm): 24 W (24 VDC)

Environment

Operating Temperature	–40 °C to +70 °C (–40 °F to +158 °F)
Operating Humidity	≤95%
Protection	IP67; IK10; NEMA4X;C5-H;TVS 6000 V lightning proof; surge protection; voltage transient protection
Anti-Corrosion Protection	C5-H(ISO12944-6:2018) , NEMA 4X
Anti-corrosion Level	Professional Protection *The products are fitted with premium-level anti-corrosion protection, making them ideal for use in sensitive environments such as chemical plants, docks, and coastlines. They perform reliably in areas up to 2 km (1.24 mi) from the coast, as well as in regions prone to acid rain exposure.

Structure

Casing Material	Bottom casing: Plastic; Top casing: Metal(Enhanced Anti-Corrosion Aluminum Alloy)
Product Dimensions	208 mm × 202 mm × 300 mm (8.19" × 7.95" × 11.81") (L × W × H)
Net Weight	5.06 kg (11.16 lb)
Gross Weight	11.06 kg (24.38 lb)

Ordering Information

Type	Model	Description
Network PTZ Camera	DH-SD6E432MB-HNR-A-PV1-ATC	4MP 32× Anti-corrosion WizSense PTZ Camera
Accessories	PFB5320WH	Wall Mount Bracket
	DC24V/2.5A	Power Adapter
	DH-PFA5510H	Anti-corrosion Pole Mount Bracket
	DH-PFA6400SH	Anti-corrosion Power Box
	PFM900-E	Integrated Mount Tester

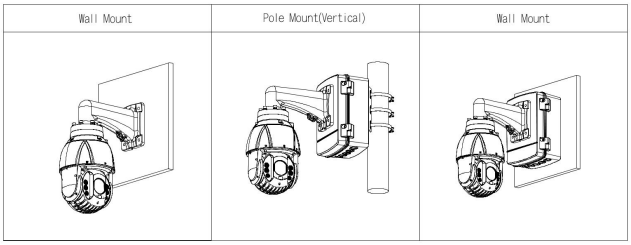

Accessories

Included:



PFB5320WH
Wall Mount Bracket



DC24V/2.5A
Power Adapter

Optional:



DH-PFA5510H
Anti-corrosion Pole Mount Bracket



DH-PFA6400SH
Anti-corrosion Power Box



PFM900-E
Integrated Mount Tester

Dimensions (mm[inch])

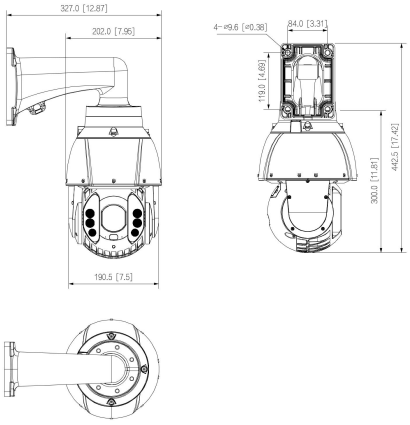

Rev 002.000 ©2026 Dahua. All rights reserved. Design and specifications are subject to change without notice.
Pictures in the document are for reference only, and the actual product shall prevail.