# DH-IPC-HDBW5859Z-Z4HE-PV-PRO-ATC

8MP WizColor Anti-Corrosion Vari-focal PTRZ Dome WizMind Network Camera



Launched by Dahua Technology, Dahua WizMind is a full portfolio of solutions composed of project-oriented products including IPC, IVSS,NVR, PTZ, XVR, Thermal and software platform which adopts industry-leading deep learning algorithms. Focusing on customer's requirements, WizMind provides precise, reliable and comprehensive AI solutions for verticals.

## Series Overview

With its deep learning algorithms, the WizMind 5 Series camera offers advanced analytical capabilities for both audio and video. It integrates intelligent features such as video metadata, AcuPick, face detection, perimeter protection, and people counting. Powered by the Xinghan Large-Scale AI Models-Vision, the camera outstandingly delivers on its object detection, recognition, and scene adaptation functions. Equipped with AI-ISP imaging technology, it offers excellent night vision performance. The series is designed for durability, being dust-proof, waterproof, and vandal-proof, in compliance with IP67 and IK10 standards, though support for these certifications may vary across models.

## Functions

### Enhanced Anti-Corrosion Aluminum Alloy

The camera is engineered with an innovative alloy structure from which impurities have been removed. Its electrochemical corrosion resistance is significantly higher than that of conventional aluminum alloys. And its dual-reinforced surface forms a dense protective barrier. Certified to C5-H and NEMA 4X standards, it is ideal for high-humidity and high-salinity environments such as ports, islands, cross sea bridges, coastal buildings, or areas prone to sulfidation, nitridation, or acid rain.

- Enhanced anti-corrosion aluminum alloy enclosure safeguards camera in corrosive environments, ensuring great reliability and an extended service life.
- 8-MP 1/1.8" CMOS image sensor, low luminance, and high definition image.
- Outputs max 8 MP (3840 × 2160)@25/30 fps.
- Built-in multi-core light, the max IR distance is 80 m and the max warm light distance is 60 m.
- ROI, SVC, SMART H.264+/H.265+, AI H.264/H.265, encoding after filter, flexible coding, applicable to various bandwidth and storage environments.
- Rotation mode, WDR, 3D NR, HLC, BLC, digital watermarking, applicable to various monitoring scenes.
- With deep learning algorithm, it supports: AcuPick, video metadata, IVS, face detection, and people counting, etc.
- Alarm: 2 in, 2 out; audio: 1 in, 1 out; RS-485; supports max 1 TB Micro SD card; built-in dual Mic; 1-ch speaker; supports two-way talk.
- 12 VDC/PoE power supply; ePoE; 12 VDC power output, and max current 165 mA.
- Supports motorized PTRZ adjustment for easy installation and configuration.
- IP67 and IK10 protection.
- Supports window heating.




### Xinghan Large-Scale AI Models-Vision

Xinghan Large-Scale AI Models-Vision seamlessly expands the storage and operational capacity of algorithmic models through the powerful integration of edge AI model algorithms and NPU computing power. Engineered with a lightweight transformer architecture and enhanced by model distillation and quantization techniques, it optimizes the computing power consumption of ViT operators. This enables the system to collaborate on multiple tasks simultaneously through joint inference between small and large models optimized for edge devices.

### WizColor Technology

Dahua WizColor Technology seamlessly combines with the powerful AI-ISP, large pixel size sensor and large aperture in cameras. This unique integration enables cameras to effortlessly capture high-quality images with vibrant colors during nighttime scenarios, ensuring fine details are preserved and minimizing motion blur. Unlike traditional self-illuminating cameras, Dahua WizColor Technology maximizes the utilization of weak light sources, such as moonlight and city lights

reflected in the sky, delivering captivating full-color images of the entire scene. It also ensures that monitoring distances are not compromised at night due to limited illumination ranges, facilitating full-color image capture even over long distances.

### AcuPick

This industry-leading search technology effectively utilizes both front-end and back-end intelligence to help with searching through massive video data to quickly and conveniently locate targets with greater precision.

### Protection (IP67, IK10, Wide Voltage)

IP67: The camera passes a series of strict test on dust and soak. It has dust-proof function, and the enclosure can work normally after soaking in 1 m deep water for 30 minutes.

IK10: The enclosure can stand the punch more than 5 times from a 5 kg hammer falling from a height of 40 cm (Impact energy is 20J).

Wide voltage: The camera allows ±30% (for some power supplies) input voltage tolerance (wide voltage range), and it is widely applied to outdoor environment with instable voltage.

## Technical Specification

### Camera

| | |
|---|---|
| Image Sensor | 1/1.8" CMOS |
| Max. Resolution | 3840 (H) × 2160 (V) |
| Scanning System | Progressive |
| Electronic Shutter Speed | Auto/Manual 1/3 s–1/100,000 s |
| Min. Illumination | 0.0007 lux@F1.6(Color,30IRE)<br>0.0003 lux@F1.6(B/W,30IRE)<br>0 lux (Illuminator on) |
| S/N Ratio | >56 dB |
| Illumination Distance | Up to 80 m (262.47 ft) (IR)<br>Up to 60 m (196.85 ft) (Warm light) |
| Illuminator On/Off Control | Auto;Manual;Zoomprio |
| Illuminator Number | 4 (Multi-core (IR + warm) light) |
| Angle Adjustment | Pan: 0°–355°<br>Tilt: 0°–80°<br>Rotation: 0°–355°<br>*Remote adjustment (Max. 1000 cycles) |

### Lens

| | |
|---|---|
| Lens Type | Motorized vari-focal |
| Lens Mount | Module |
| Focal Length | 8 mm–32 mm |
| Max. Aperture | F1.6 |
| Field of View | H: 41°–15°; V: 22°–9°; D: 47°–18° |
| Iris Control | Auto |
| Iris Control Type | P-Iris |
| Close Focus Distance | 1.5 m (4.92 ft) |

| DORI Distance | Lens | Detect | Observe | Recognize | Identify |
|---|---|---|---|---|---|
| | W | 224.0 m | 89.6 m | 44.8 m | 22.4 m |
| | W | ( 734.91 ft) | ( 293.96 ft) | ( 146.98 ft) | ( 73.49 ft) |
| | T | 564.0 m ( 1850.39 ft) | 225.6 m ( 740.16 ft) | 112.8 m ( 370.08 ft) | 56.4 m ( 185.04 ft) |
| | *DORI (Detect, Observe, Recognize, Identify) is a standard system (EN-62676-4) for defining the ability of a person viewing the video to distinguish persons or objects within a covered area. The numbers in this table do not reflect intelligent function distances. For intelligent function distances, refer to installation and commissioning manual/project design tool. | | | | |

### Intelligence

| | |
|---|---|
| IVS (Perimeter Protection) | Intrusion, tripwire, fast moving (the three functions support the classification and accurate detection of human, vehicle, animal and other); loitering detection, people gathering, parking detection, stay detection. Offers Perimeter Protection Large-Scale AI Models to extend the target detection range and reduce the rate of false alarm. |
| SMD | SMD 4.0 |
| AcuPick | Uses deep learning algorithms and works with back-end devices to accurately match targets, such as people, animal and motor vehicles, and search through live and recorded videos to quickly locate targets. |
| AI SSA | Yes |
| Face Detection | Face detection; snapshot; snapshot optimization; optimal face snapshot upload; face enhancement; face exposure; face attributes extraction including 6 attributes and 8 expressions; face snapshot set as face, one-inch photo or custom; snapshot strategies (real-time snapshot, quality priority and optimization snapshot); face angle filter; optimization time setting. |
| People Counting | Tripwire people counting, generating and exporting report (day/week/month/year); people counting in area and queue management, generating and exporting report (day/week/month); 4 rules can be set for tripwire, people counting in area and queue management. |
| Heat Map | Yes |
| Video Metadata | Motor vehicle, non-motor vehicle, face, and human body detection; snapshot; snapshot optimization; optimal face snapshot upload.<br>Extraction of motor vehicle and non-motor vehicle attributes: extracts 6 attributes for motor vehicle and 6 attributes for non-motor vehicle.<br>Extraction of face and human body attributes: extracts 6 attributes for face and 8 attributes for human body. |
| Smart Search | Work together with Smart NVR to perform refine intelligent search, event extraction and merging to event videos |

### Video

| | |
|---|---|
| Video Compression | H.265; H.264; H.264H; H.264B; MJPEG (Only supported by the sub stream) |
| AI Coding | AI H.265; AI H.264<br>*Includes smart codec technology, Smart H.265+ and Smart H.264+ |

| | |
|---|---|
| Video Frame Rate | Main stream: 3840 × 2160@(1–25/30 fps)<br>Sub stream: 704 × 576@(1–25 fps)/704 × 480@(1–30 fps)<br>Third stream: 1920 × 1080@(1–25/30 fps)<br>Fourth stream: 1280 × 720@(1–25/30 fps)<br>*The values above are the max. frame rates of each stream; for multiple streams, the values will be subjected to the total encoding capacity. |
| Streaming Capability | 4 streams |
| Resolution | 8M (3840 × 2160); 6M (3072 × 2048/3200 × 1800); 5M (3072 × 1728/2592 × 1944/2960× 1668); 4M (2688 × 1520/2560 × 1440); 3M (2048 × 1536/2304 × 1296); 1080p (1920 × 1080); 1.3M (1280 × 960); 720p (1280 × 720); D1 (704 × 576/704 × 480); VGA (640 × 480); CIF (352 × 288/352 × 240) |
| Bit Rate Control | VBR;CBR |
| Video Bit Rate | H.264: 3 kbps–16384 kbps<br>H.265: 3 kbps–16384 kbps |
| Day/Night | Auto(ICR)/Color/B/W |
| BLC | Yes |
| HLC | Yes |
| WDR | 130 dB |
| Scene Self-adaptation (SSA) | Yes |
| White Balance | Auto; natural; street lamp; outdoor; manual; regional custom |
| Gain Control | Auto/Manual |
| Noise Reduction | 3D NR |
| Motion Detection | OFF/ON (4 areas, rectangular) |
| Region of Interest (RoI) | Yes (4 areas) |
| Image Stabilization | Electronic Image Stabilization (EIS) |
| Smart Illumination | Yes |
| Smart Dual Light | Yes |
| Defog | Yes |
| Image Rotation | 0°/90°/180°/270° (Support 90°/270° with 4M (2688 × 1520) resolution and lower) |
| Mirror | Yes |
| Privacy Masking | 4 mosaics or 8 color blocks |

## Audio

| | |
|---|---|
| Built-in MIC | Yes, built-in dual Mic |
| Built-in Speaker | Yes, built-in speaker |
| Audio Compression | G.711a; G.711Mu; PCM; G.726; G.723 |

## Alarm

| | |
|---|---|
| Alarm Event | No SD card; SD card full; SD card error; network disconnection; IP conflict; illegal access; motion detection; video tampering; tripwire; intrusion; fast moving; loitering detection; people gathering; parking detection; scene changing; audio detection; voltage detection; external alarm; face detection; video metadata; SMD; people counting in area; stay detection; people counting; people number error |
| Alarm Event | detection; queue people number alarm; queue time alarm; security exception; defocus detection |

## Network

| | |
|---|---|
| Network Port | RJ-45 (10/100 Base-T) |
| SDK and API | Yes |
| Network Protocol | IPv4; IPv6; HTTP; TCP; UDP; ARP; RTP; RTSP; RTCP; RTMP; SMTP; FTP; SFTP; DHCP; DNS; DDNS; QoS; UPnP; NTP; Multicast; ICMP; IGMP; NFS; SAMBA; PPPoE; SNMP; P2P; Auto Registration |
| Interoperability | ONVIF (Profile S & Profile G & Profile T & Profile M); CGI |
| User/Host | 20 (Total bandwidth: 80 M) |
| Storage | FTP; SFTP; Micro SD card (support max. 1 TB); NAS |
| Browser | IE: IE 11 and later<br>Chrome: Chrome 102 and later<br>Firefox: Firefox 88 and later |
| Management Software | DSS; DMSS; DoLynk Care |
| Mobile Client | iOS;Android |
| Security | Digest;WSSE;Account lockout;Security logs;IP/MAC filtering;Generation and importing of X.509 certification;syslog;HTTPS;802.1x;Trusted boot;Trusted execution;Trusted upgrade;Session security;Security warning;AES 256;SSL/TLS1.3;TPM 2.0 (optional) |

## Function

| | |
|---|---|
| Defog (Glass Heating) | Window heating:Quickly removes water,ice,snow,and mist from the window to keep images clear |
| Light Warning | Warm light warning<br>Flash/Solid on duration: 5 s–30 s<br>Flash frequency: high, medium, low |
| Sound Warning | Offers 11 sound alarms and supports importing 10 custom sound alarms.<br>Sound: 0–100<br>Play times can be set from 1 to 10. |

## Certification

| | |
|---|---|
| Certifications | CE-LVD: EN62368-1<br>CE-EMC: Electromagnetic Compatibility Directive 2014/30/EU |

## Port

| | |
|---|---|
| RS-485 | 1 (baud rate range: 1200 bps–115200 bps) |
| Audio Input | 1 channel (RCA port) |
| Audio Output | 1 channel (RCA port) |
| Alarm Input | 2 channels in: supports wet contact connection (max load 5 mA 3–5 VDC); supports dry contact connection |
| Alarm Output | 2 channels out: dry contact, max load 1,000 mA 30 VDC/500 mA 50 VAC |
| Power Output | 12 VDC power output, max. current 165 mA, peak current 700 mA |

## Power

| | |
|---|---|
| Power Supply | 12 VDC (±30%); PoE+ (802.3at); ePoE |
| Dual Power Backup | When the power adapter and PoE provide power at the same time, disconnect one of them. The device will continue to work, but will not restart. |

| | |
|---|---|
| Power Consumption | Basic: 5.3 W (12 VDC); 6.4 W (PoE)<br>Max. (IR on + siren and light active deterrence + intelliegece on + window heating): 21.3 W (12 VDC); 24.2 W (PoE)<br>Heating: 2.1 W (12 VDC); 2.4 W (PoE) |
| ePoE | Yes |

## Environment

| | |
|---|---|
| Operating Temperature | –40 °C to +60 °C (–40 °F to +140 °F) |
| Operating Humidity | ≤95% (RH), non-condensing |
| Storage Temperature | –40 °C to +60 °C (–40 °F to +140 °F) |
| Storage Humidity | ≤95% (RH), non-condensing |
| Protection | IP67; IK10 |
| Anti-corrosion Level | Professional Protection<br>*The products are fitted with premium-level anti-corrosion protection, making them ideal for use in sensitive environments such as chemical plants, docks, and coastlines. They perform reliably in areas up to 2 km (1.24 mi) from the coast, as well as in regions prone to acid rain exposure. |
| Anti-Corrosion Protection | C5-H(ISO12944-6:2018)<br>NEMA 4X |

## Structure

| | |
|---|---|
| Casing Material | Casing: Metal (Enhanced Anti-Corrosion Aluminum Alloy) |
| Product Dimensions | 150 mm × Φ159 mm (5.91" × Φ6.27") |
| Net Weight | 1.4 kg (3.09 lb) |
| Gross Weight | 1.9 kg (4.19 lb) |

## Ordering Information

| Type | Model | Description |
|---|---|---|
| IP CAMERA | DH-IPC-HDBW5859Z-Z4HE-PV-PRO-ATC | 8MP WizColor Anti-Corrosion Vari-focal PTRZ Dome WizMind Network Camera |
| Accessories (Optional) | DH-PFA101H | Anti-corrosion Mount Adapter |
| | DH-PFB300CH | Anti-corrosion Ceiling Mount Bracket |
| | DH-PFA5510H | Anti-corrosion Pole Mount Bracket |
| | DH-PFB302SH | Anti-corrosion Wall Mount Bracket |
| | DH-PFA156H | Anti-corrosion Pole Mount Bracket |
| | DH-PFM320-020EN | DC12V 2A Power Adapter |
| | DH-PFM320D-EN | DC12V 2A Power Adapter |
| | PFM900-E | Integrated Mount Tester |
| | DHI-TF-P100/1TB | MicroSD Card |

## Accessories

Optional:



DH-PFA101H
Anti-corrosion Mount Adapter



DH-PFB300CH
Anti-corrosion Ceiling Mount Bracket



DH-PFA5510H
Anti-corrosion Pole Mount Bracket



DH-PFB302SH
Anti-corrosion Wall Mount Bracket



DH-PFA156H
Anti-corrosion Pole Mount Bracket



DH-PFM320-020EN
DC12V 2A Power Adapter



DH-PFM320D-EN
DC12V 2A Power Adapter



PFM900-E
Integrated Mount Tester



DHI-TF-P100/1TB
MicroSD Card

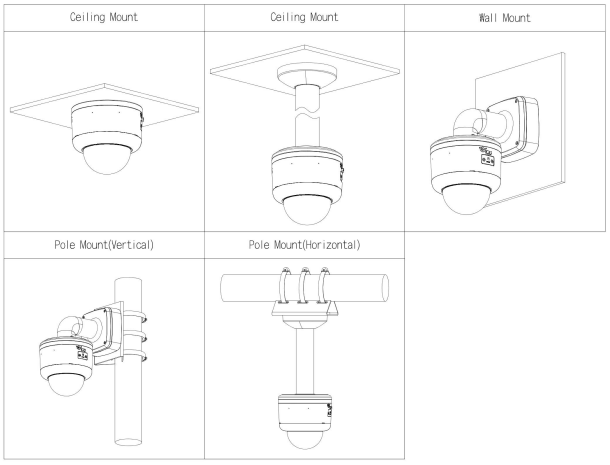

## Dimensions (mm[inch])

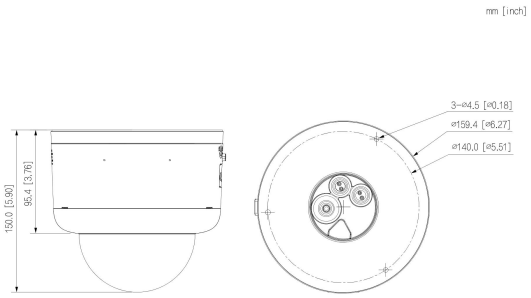


Rev 002.000 ©2026 Dahua. All rights reserved. Design and specifications are subject to change without notice.
Pictures in the document are for reference only, and the actual product shall prevail.